LINEAR GATE OPERATOR
ARM2000BI VECTI / -F

max. 3 m | DC MOTOR 230 V MOTOR | Opening time from 12 to 17 s

P-650ARM2000BI

Irreversible DC electromechanical covered screw gate operator with encoder and mechanical opening and closing stops. Max. gate leaf 3 m.

P-650VECTI

Irreversible 230 V electromechanical covered screw gate operator, 1400 rpm with mechanical opening and closing stops. Max. gate leaf 3 m.

P-650VECTI-F

Irreversible 230 V electromechanical covered screw gate operator 1400 rpm, with opening electrical limit switches. Max. gate leaf 3 m.

Accessories for ARM2000/VECTI series
Page 62 - 63

Further accessories:
Transmitters Page 222
Photocells Page 228
Flashing lights
Page 232

120 VOLT AVAILABLE · Professional APP · Family app · EN 12453 · MADE IN ITALY

ARM2000BI

FEATURES:

- residential/apartment building use
- for gates leaves up to 3 m
- covered screw gate operator
- brackets to be welded, included
- adjustable mounting brackets (optional)
- bronze lead nut for strength and silent operation
- electrical connections are easier thanks to the larger upper space
- manual release with a customized metal key
- quick and easy installation

18 V PROS:

- low voltage DC gate operator
- auto-learning of the gate stroke through optical encoder
- obstacle detection and crush prevention
- in accordance with EN 12453 standards
- works even during power outage thanks to the optional backup battery
- fast operating speed
- soft start and soft stop
- intensive use, ideal for use on apartment buildings and public entrances

230 V PROS:

- 230 V gate operator
- built-in capacitor
- high torque and power
- suitable for gates with mechanical operating issues

SILENCE OF MOVEMENT
The steel towing fork and the bronze nut ensure absolute silence during movement.

EASY INSTALLATION
Thanks to the connections from above, it is more convenient and faster to install and wire.

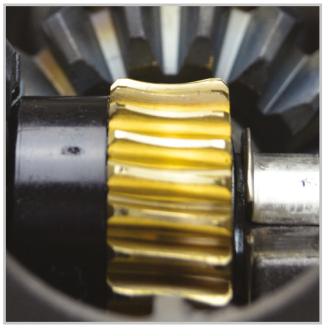

PLUNGE ROUNDED TOOTHING
The special plunge rounded toothing guarantees a greater bearing surface and therefore less wear and longer life.

MANUAL RELEASE
The manual release device is simple and intuitive and is protected by a unique coded key that can also be used for the external key selector.

Technical features	ARM2000BI	VECTI	VECTI-F
Power supply	230 V AC (50-60 Hz)	230 V AC (50 - 60 Hz)	
Motor power supply	18 V DC	230 V AC	
Open circuit voltage	1,1 A	1,5 A	
Power rating	120 W	350 W	
Opening time 90°	12 s*	17 s*	
Duty cycle	100 %	36 %	
Operating temperature	-20° C ÷ +55° C	-20° C ÷ +55° C	
Motor thermal protection	-	160° C	
Degree of protection IP	IP 44	IP 44	
Stroke length	396 mm	346 mm	
Control unit to match	D749MA	D770M	
Actuator weight	6,0 Kg	7,2 Kg	7,4 Kg

TECHNICAL DRAWINGS

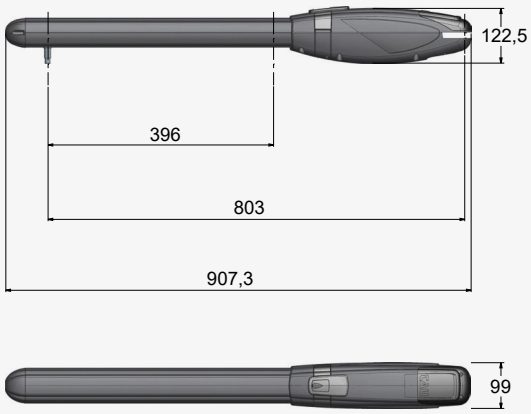

* Varies based on installation geometry and the set deceleration

ARM/VECTI KIT

WITH KEY SELECTOR

KIT composition:

LINEAR GATE OPERATORS

P-900VLED

P-900OPTIC

P-300TKEY + P-300TSL

P-250K-SLIMRP

CONTROL UNIT

S-ARM0000208

+

S-ARM0000223

C-CRT

MODELS IN: DC MOTOR

KIT	MODEL	MAX. GATE LEAF	CONTROL UNIT	ENCODER	REVERSIBLE / IRREVERSIBLE
K-KARM2000BIL	P-650ARM2000BI	3+3 m	P-750D749MA	●	Irreversible
K-KARM3000BIL	P-650ARM3000BI	4+4 m	P-750D749MA	●	Irreversible

MODELS IN: 230 V AC

KIT	MODEL	MAX. GATE LEAF	CONTROL UNIT	ENCODER	REVERSIBLE / IRREVERSIBLE
K-KVECTI	P-650VECTI	3+3 m	P-750D770M		Irreversible
K-KARM3000L	P-650ARM3000IFC	4+4 m	P-750D770M		Irreversible

ARM/VECTI KIT

WITH TWO TRANSMITTERS

KIT composition:

LINEAR GATE OPERATORS

P-900VLED

P-900OPTIC

P-250K-SLIMRP

P-250K-SLIMRP

CONTROL UNIT

S-ARM0000208

+

S-ARM0000223

C-CRT

MODELS IN: DC MOTOR

KIT	MODEL	MAX. GATE LEAF	CONTROL UNIT	ENCODER	REVERSIBLE / IRREVERSIBLE
K-KARM2000BIL2	P-650ARM2000BI	3+3 m	P-750D749MA	●	Irreversible
K-KARM3000BIL2	P-650ARM3000BI	4+4 m	P-750D749MA	●	Irreversible

MODELS IN: 230 V AC

KIT	MODEL	MAX. GATE LEAF	CONTROL UNIT	ENCODER	REVERSIBLE / IRREVERSIBLE
K-KVECTI2	P-650VECTI	3+3 m	P-750D770M		Irreversible
K-KARM3000L2	P-650ARM3000IFC	4+4 m	P-750D770M		Irreversible

ACCESSORIES

COMMON ACCESSORIES

P-650ARMKITSTF
Kit consisting of 2 multi-position fixing brackets. For ARM2000/3000 and VECTI series actuators, a second kit of 2 brackets is required for the front fixing of the motor to the gate

P-650ARMKITSTI
Tilting fixing bracket for upward sloping gates (1 pc.)

P-650ARMKITFCR
Adjustable mechanical stops (2 pcs)

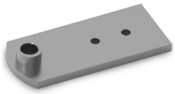

P-650ARM330 NEW
Fixing bracket for large pillars (1 pc.) (for ARM3000BI and ARM3000IFC)

P-700BAP1
Gate stopper for light leaves

P-700BAP2
Gate stopper wall/floor mount

P-650CVS
Curved manual lock

P-650ESV1 / P-650ESV2
Vertical electric lock recommended for leaves longer than 3 m (1=LEFT - 2=RIGHT)

P-650ES1 / P-650ES2
Horizontal electric lock recommended for leaves longer than 3 m (1=LEFT - 2=RIGHT)

P-900TOWERF
Painted aluminum column for photocells with 1 hole h49 cm

P-750CUP
Control unit enclosure protective lid

P-250SM120
Memory card for 120 radio codes

P-900PIVOTL
Set of two adjustable photo-cells with temporary and fixed courtesy light

P-250T-CONNECT
Ethernet + Wi-Fi device - to enable through Tau Open 2.0 application, the use of the smartphone remotely, to open/close and check the status of the gate

P-750COL
Control unit mounting post

18/24 VOLT ACCESSORIES

P-750D749MA
Electronic control unit for one or two DC gate operators with encoder, complete with 433,92 MHz rolling code radio receiver, battery charger, transformer and enclosure

P-750D749MA-R
Electronic control unit for 1-2 DC fast operators with encoder, complete with 433,92 MHz rolling code radio receiver, battery charger, transformer and enclosure

K-200BATT
12 Volt Battery, 7,2 Ah with cable

K-030KITKB20
Battery cables kit (20 pcs)

M-030000CC50
Multicore cable (2 x 2.5 sq.mm + 3 x 0.5 sq.mm)

⚠ Use only M-030000CC50 cable or equivalent

230 V AC ACCESSORIES

P-750D770M
Electronic control unit for one or two 230 V gate operators with soft-stop and built-in 433,92 MHz rolling code radio receiver, complete with enclosure

LIMIT TO USE*

If the leaves are closed or less than 50% open, and the gate is installed in windy areas, the indicated lengths <u>must be reduced by 50%.</u>

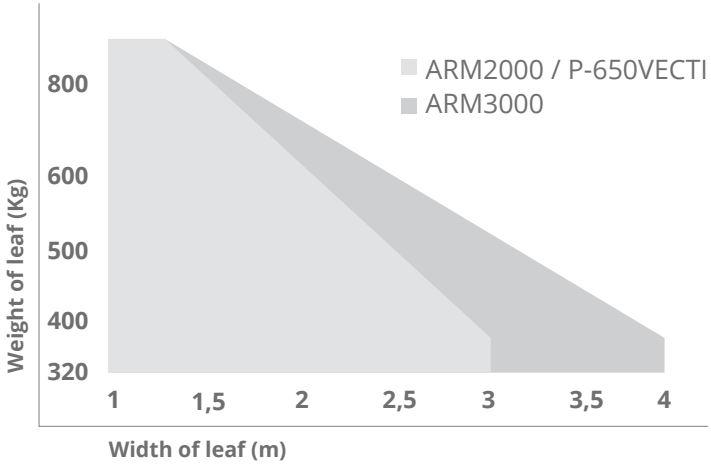

INSTALLATION SIZES (MM)*

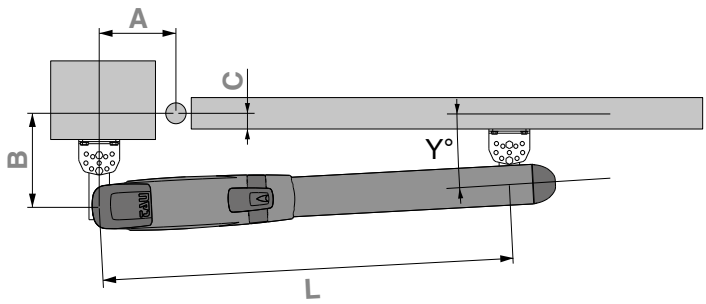

* Follow the instructions for the installation

NB: In order to get the best perfomances, the operators have to be installed with A and B values as high as possible. To work correctly, the angle formed by the actuator and the gate (See the picture above for Y° value) must be > 2° (ARM2000/P-650VECTI) both with the gate completely closed and completely open.

Model	Leaf opening	A	B	C	L
VECTI/-F ARM2000BI	90°	Min. 145	from 150 to 190	20	800
		Max. 175	150	20	800
	95°	Min. 150	from 150 to 185	20	800
		Max. 170	from 150 to 155	20	800
	100°	Min. 165	from 150 to 155	20	800
		Max. 170	150	20	800
Recommended	**100°**	**165**	**155**	**20**	**800**

Model	Leaf opening	To	B	C	L
ARM3000BI ARM3000IFC	90°	Min. 150	from 160 to 235	20	910/890
		Max. 190	from 160 to 185	20	910/890
	95°	Min. 165	from 160 to 215	20	910/890
		Max. 200	from 160 to 165	20	910/890
ARM3000BI	100°	Min. 180	from 160 to 180	20	910
		Max. 200	from 160 to 165	20	910
	107°	180	148	20	910
Recommended	**90°**	**175**	**195**	**20**	**910/890**
ARM3000BI + staffa P-650ARM330	90°	175	from 220 to 240	20	910
	90°	170	from 250 to 260	20	910
	90°	165	270	20	910
	100°	210	210	20	910
	104°	220	190	20	910

Use and maintenance manuals

ARM2000 | ARM3000 | D749MA-R | D749MA | D770M